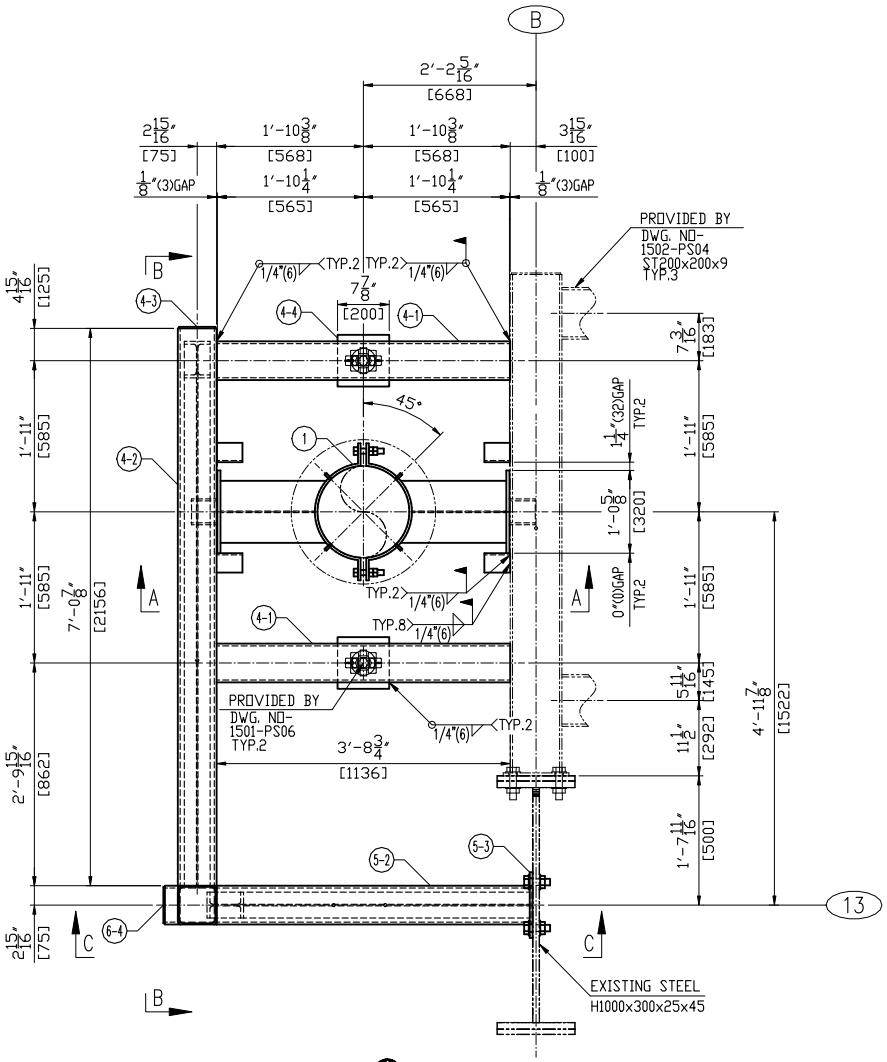

PLAN VIEW

Revision History

Rev	Description	Date	Drawn / Checked By Approved By
–	INITIAL ISSUE	2026-01-21	Drawn J.B.HONG Checked By T.H.KIM Approved By B.L.CHOI

BILL OF MATERIAL — TOTAL WEIGHT : 1305.6 LB — SELECTION NO. 1501 — AREA LEFT

ITEM	DESCRIPTION	TYPE OR SIZE	LENGTH(mm)	LENGTH(IN)	QTY.	MATERIAL	WEIGHT(LB)/UNIT	WEIGHT(LB)/TOTAL	REMARK
1	PIPE CLAMP	PCSDA-350-565			1	A387-22		201.94	NOTE #2
2	CHANNEL	C150x75x6.5x10	100	3.94	4	A36	4.10	16.40	NOTE #3
3	CHANNEL	C100x50x5x7.5	100	3.94	2	A36	2.06	4.12	NOTE #3
4-1	SQUARE TUBE(1-I6)	ST150x150x9	1136	44.72	2	A500 Gr.B	95.67	191.34	NOTE #3
4-2	SQUARE TUBE(1-I6)	ST150x150x9	2156	84.88	1	A500 Gr.B		181.57	NOTE #3
4-3	COVER PLATE(4-R14)	PL6x141x141			1	A36		2.06	NOTE #3
4-4	PLATE	PL20x200x200			2	A36	13.85	27.70	NOTE #3
5-1	SQUARE TUBE(1-I6)	ST150x150x9	2342	92.20	1	A500 Gr.B		197.23	NOTE #3
5-2	SQUARE TUBE(1-I6)	ST150x150x9	1212	47.72	1	A500 Gr.B		102.07	NOTE #3
5-3	PLATE(4-I27-SLOT33)	PL12x254x356			1	A36		18.78	NOTE #3
5-4	COVER PLATE(4-R14)	PL6x141x141			1	A36		2.06	NOTE #3
6-1	SQUARE TUBE(1-I6)	ST150x150x9	1412	55.59	1	A500 Gr.B		118.91	NOTE #3
6-2	H-BEAM	H100x100x6x8	1766	69.53	1	A36		66.97	NOTE #3
6-3	PLATE(4-I27-SLOT33)	PL12x254x356			2	A36	18.78	37.56	NOTE #3

PIPING INFORMATION

PIPE SIZE (IN): 14 — PIPE MATERIAL: A335-P92 — ISO NO.: 1501 — INSULATION (IN): 4 — OPER. TEMP (F): 1089

"Z" UP, "Y" NORTH, "X" GAS FLOW EAST

SUPPORT NUMBER	SUPPORT COORDINATES X	Y	Z	DESIGN LOADS (KIPS) X	Y	Z	DESIGN MOVEMENTS (IN) X	Y	Z
1501-PS05	32'-9 11/16'	23'-11 3/8'	77'-2 3/4'	±0.231	±1.839	-0.31	-0.12	1.07	-1.75
	10000	7300	23540						

HANGER SETTING DATA(EACH)			
SPRING LOAD	- KIPS	TOTAL TRAVEL	- IN
HOT LOAD	- KIPS	THERMAL MOVEMENT	- IN
COLD LOAD	- KIPS	SPRING RATE	- LB/IN
		VARIABILITY	- %

UNIT NO.: 11

NOTES:

1. PIPE SUPPORT SHOP ATTACHMENTS, GENERAL NOTES, WELD & PLATE DETAILS 1635572-D1S0-3800
2. THIS ITEM WILL BE SUPPLIED BY ENGINEERED PIPE SUPPORT SUPPLIER.
3. THIS ITEM WILL BE SUPPLIED BY STEEL SUPPORT FABRICATOR.
4. PIPE ATTACHMENTS THAT ARE SHOP WELDED ONTO THE PIPE ARE SUPPLIED BY THE PIPE FABRICATOR.
5. BILL OF MATERIAL SHOWN ARE FOR ONE (1) SUPPORT, THERE IS ONE (1) SUPPORT PER UNIT
6. REFER TO DRAWING 1635572-D2S0-3801~3804 FOR TYPICAL SHOP WELDED CONNECTION DETAILS NOT SPECIFIED ON THIS DRAWING.
7. FF* : 1 15/16(50)mm FIELD ADJUST
8. THIS ITEM WILL BE SUPPLIED BY CUSTOMER.

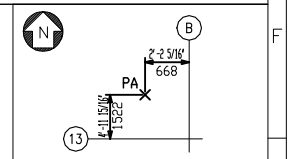

KEY PLAN

ISOMETRIC VIEW

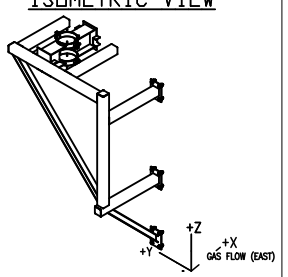

NLR
Copyright© GE Vernova and/or its affiliates 2026
All rights reserved. The information herein is proprietary information of GE Vernova and/or its affiliates. Thus, it is being provided with the explicit expectation of restricted use. All persons or legal entities receiving this information shall be deemed by the act of its receipt to have contractually agreed to make no duplications, reproductions of any nature by any means, modifications, disclosures, or use use any portion of this material; except as is expressly authorized in writing by GE Vernova and/or its affiliates.

THIRD ANGLE PROJECTION

Similar To: NONE	Created By: SEONGHWA		MLI No. NONE
First Made For: 1635572	Checked By: VIMAL.V	Approved By: Kim, Chunrae	IEC61355 No. MTC
	Document Type: DETAIL DRAWING		Sheet Size A2
	Document Title: PIPE SUPPORT FOR HP STEAM		
Creation Date 2026-01-21	Drawing No. 1635572-1501-PS05	Revision –	Sheet 1 OF 3

GE VERNOVA

ITEM	DESCRIPTION	TYPE OR SIZE	LENGTH(mm)	LENGTH(IN)	QTY.	MATERIAL	WEIGHT(LB)/UNIT	WEIGHT(LB)/TOTAL	REMARK
6-4	COVER PLATE(4-R14)	PL6x141x141			1	A36		2.06	NOTE #3
7	H-BEAM	H100x100x6x8	2978	117.24	1	A36		112.92	NOTE #3
8	H.S.B/N/2PW	1"-8 UNC-3 1/4"			12	A325	1.65	19.80	NOTE #3
9	LUG PLATE	PL10x30x50			8	A36	0.26	2.08	NOTE #4

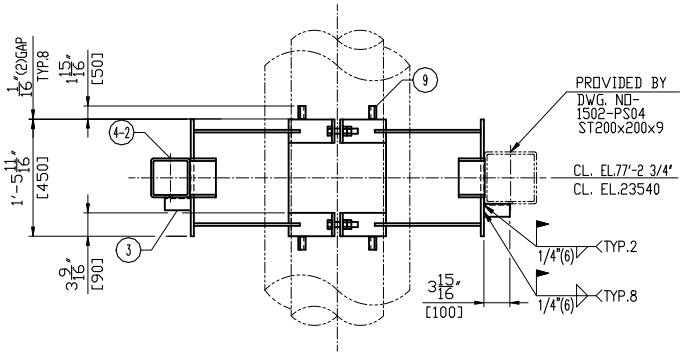

SECTION A-A
LOOKING NORTH

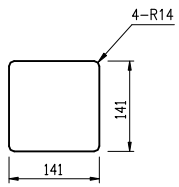

ITEM 4-3 5-4 6-4

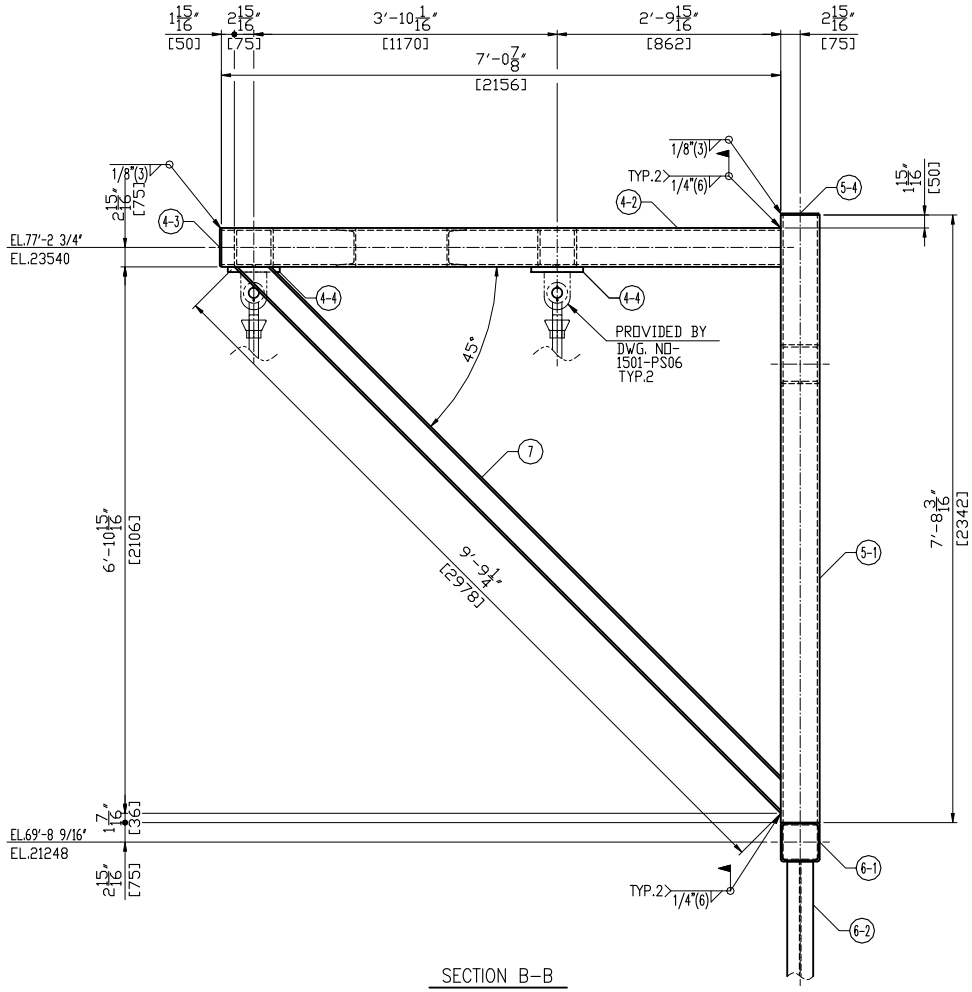

SECTION B-B
LOOKING EAST

GE VERNOVA	Document Type: DETAIL DRAWING		Sheet Size A2
	Document Title: PIPE SUPPORT FOR HP STEAM		
Creation Date 2026-01-21	Drawing No. 1635572-1501-PS05	Revision –	Sheet 2 OF 3

NLR
Copyright© GE Vernova and/or its affiliates 2026
All rights reserved. The information herein is proprietary information of GE Vernova and/or its affiliates.

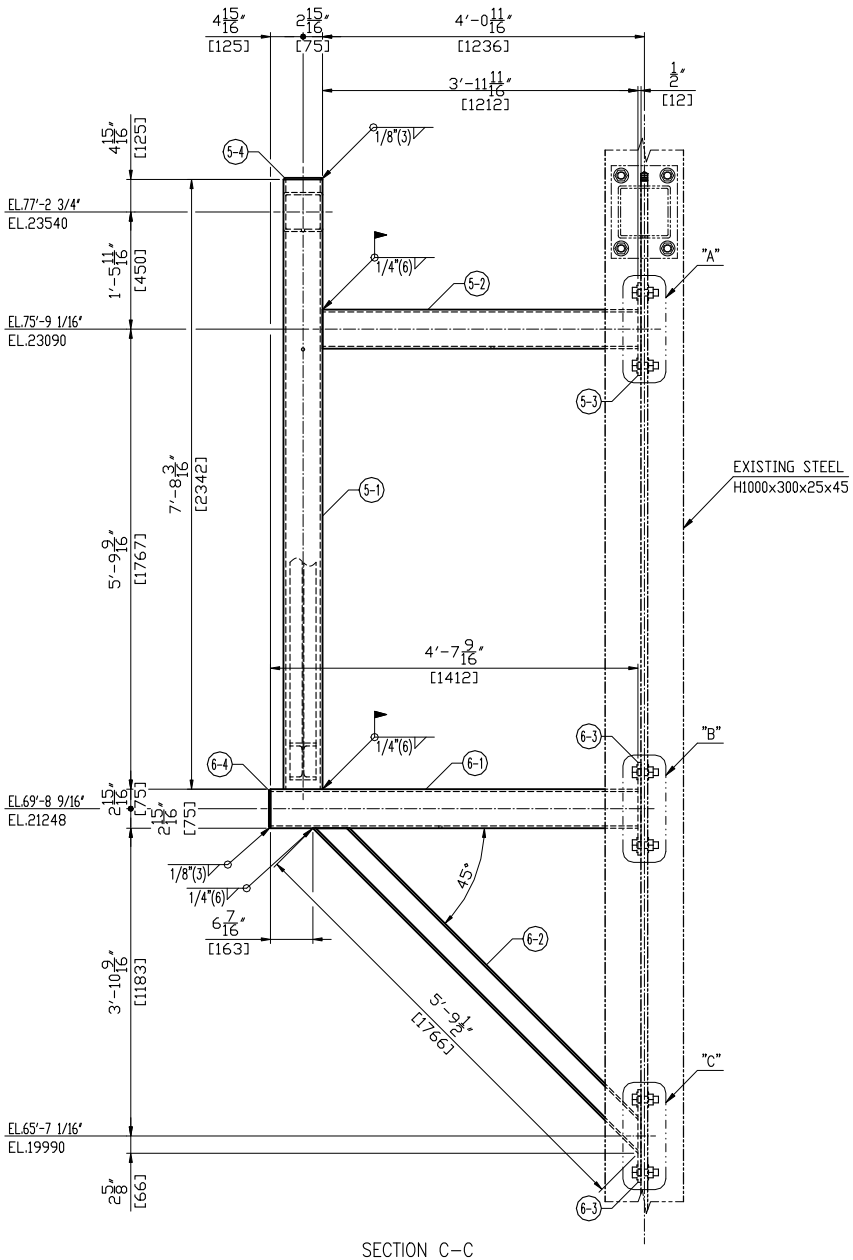

SECTION C-C
LOOKING NORTH

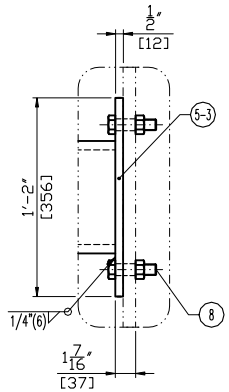

DETAIL "A"

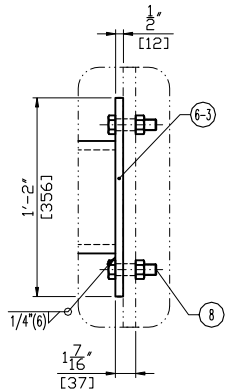

DETAIL "B"

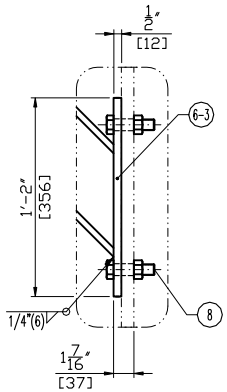

DETAIL "C"

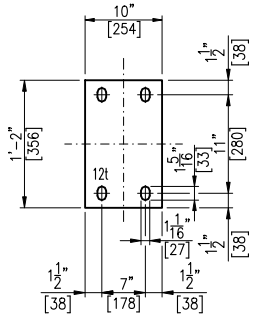

ITEM 5-3 6-3

NLR

Copyright © GE Vernova and/or its affiliates 2026
All rights reserved. The information herein is proprietary information of GE Vernova and/or its affiliates.

GE VERNOVA	Document Type: DETAIL DRAWING		Sheet Size A2
	Document Title: PIPE SUPPORT FOR HP STEAM		
Creation Date 2026-01-21	Drawing No. 1635572-1501-PS05	Revision –	Sheet 3 OF 3